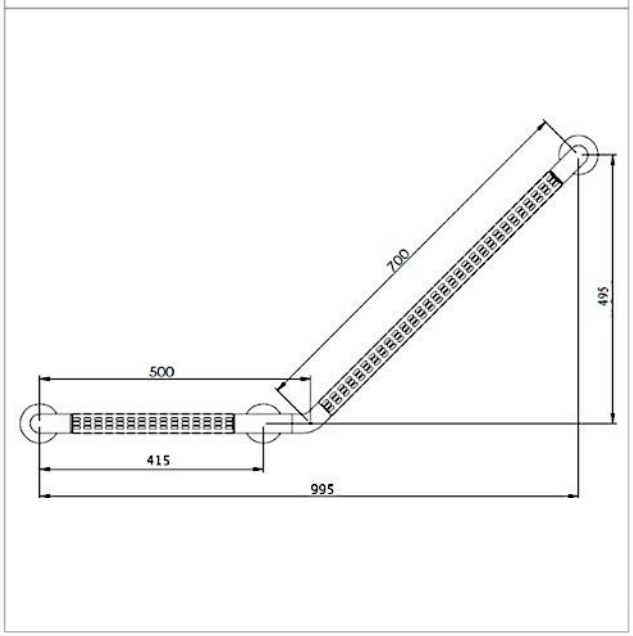

Brand

LOUIS

Product Name

LGA7050 (Pair)

Description

- V-shaped grab bar
- Anti-bacterial, anti-slip and good thermal properties
- Fade resistant, lockable and hygienic
- High life-expectancy

Color / Material

Colour available: White, Yellow, Blue and D-Blue

Material: Stainless steel or heavy duty reinforce aluminum pipe internally and nylon externally

Specifications

- Size of grab bar: 700 x 500 mm
- Diameter of grab bar: 35 mm
- 24 pcs pcs of M5.5 x 50 stainless steel screw, 24 pcs of M8 x 40 PVC wall plug and 6 pcs M6 x 25 partition screw will be provided
- Maximum loading capacity of 130kg
- All Grab bars can only be installed on solid concrete wall and solid brick wall
- For this case, it can also be installed on partition wall
- Regular maintenance and inspection is required

Colours availble for LGA7050

	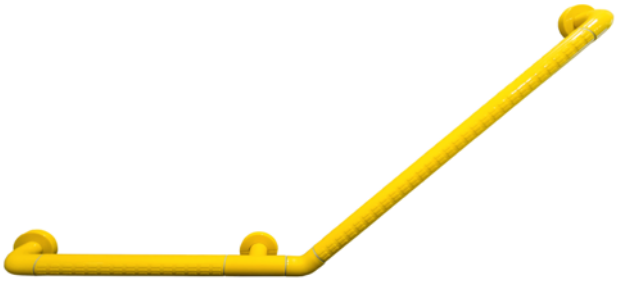
White (RAL-9016)	Yellow (RAL-1003)
Blue (RAL-5023)	D-Blue (RAL-5002)

* Product images are for illustrative purposes only and may differ from the actual product