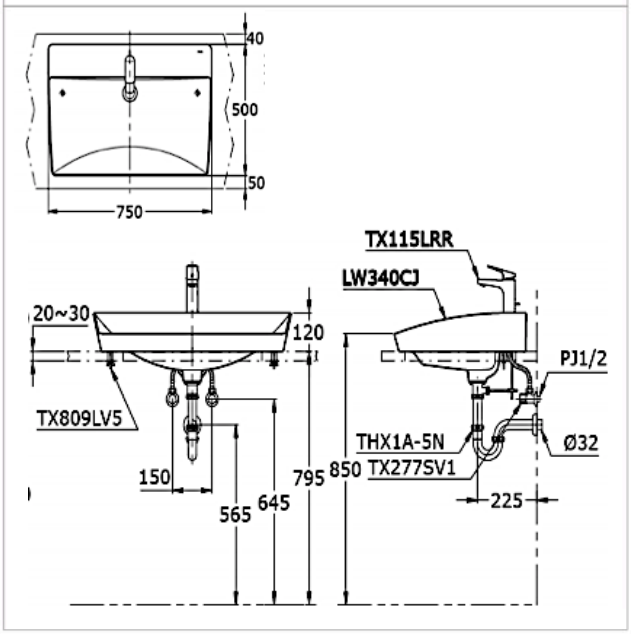

Brand

TOTO

Product Name

LW340CJ

Description

- Counter top basin

Colour / Material

White

Specifications

Size : 750W x 500D x 120H mm