Excellent

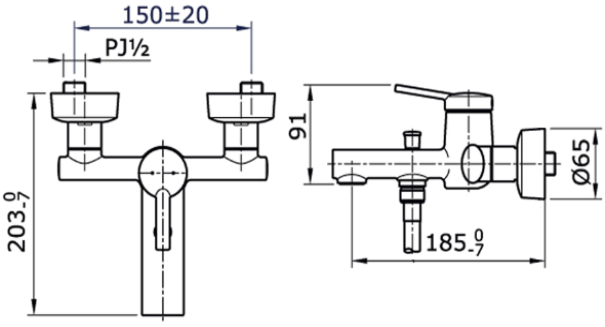

Brand

TOTO

Product Name

TX471SVV1

Description

- "VASIL Collection" Single Lever Bath & Shower Mixer

Colour / Material

Chrome

Specifications

Water pressure : 0.05MPa ~ 0.75MPa