Very Good

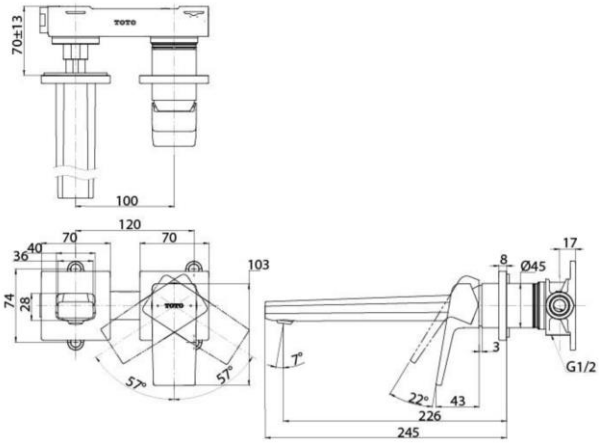

Brand

TOTO

Product Name

TLG10308S

Description

- GB series wall-mount single lever lavatory faucet (long spout) (w/o) waste fitting

Colour / Material

Brass Chrome

Specifications

Water pressure : 0.05 MPa ~ 1.0 MPa