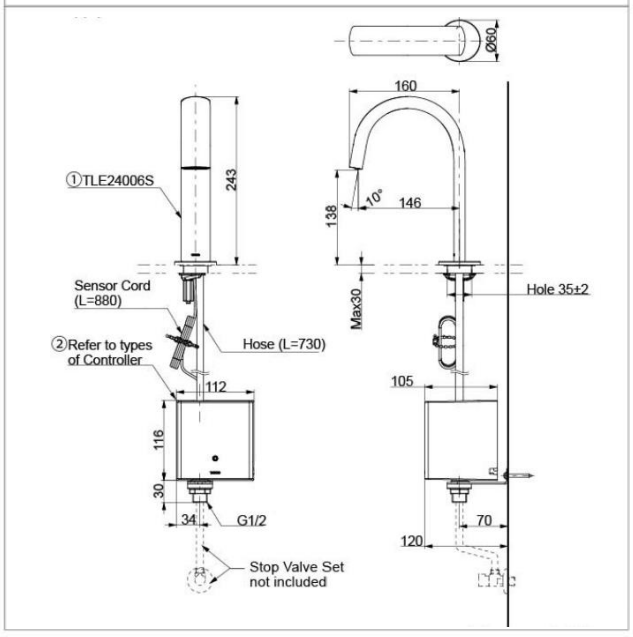

Brand

TOTO

Product Name

TLE24006S / TLE03502A

Description

- Self-powered sensor tap
- TLE24006S: Sensor tap (Cold water)
- TLE03502A: Self-powered controller
- SELF POWER Technology: Self-generated power saves electricity
- SOFT FLOW technology provides soft, lustrous and enriching experience with minimal splashing
- Sensor is strategically placed for accurate detection
- Low maintenance

Colour / Material

Nickel Chrome

Specifications

Preset Timing	: 60s
Spout Length	: 160 mm
Height	: 243 mm
Water Pressure	: 0.05 MPa ~ 0.75 MPa
Water Usage	: 1.6L/min